IxWDM will lead transmission network at the all-IP age

__ZTE's green, intelligent and integrated WDM network solution

As IP-based telecom services have become an irreversible trend, how to build efficient, intelligent and reliable bearer network at the all-IP age will be the new concern of major carriers.

I. Challenges of transmission network at the all-IP age

The progress, from VoIP to software switching AG and from IP-based 2G basestation to 3G/4G IP interface, shows that IP-based services will be the future choice of traditional and new services and the all-IP service age will come. Driven by all-IP-based services, basic transmission network is faced with great challenge.

1. Network convergence: Core equipment of fixed and mobile networks over one IP backbone network make the network more flat.
2. Topology change: The deployment of aggregate router enlarges the capacity of single node in the network and leads to interconnected MESH network topology.

The all-IP age has different demands for transmission network at different layers: The backbone layer provides large bandwidth for T-level backbone router and supports multivendor interconnection; the metro layer supports more service types and provides flexible service dispatching, intelligent management and reliable carrier-class protection; the access layer supports more Internet access services via broadband and efficient convergence of mobile data service, and provides cost-effective bit transmission scheme.

In order to meet the above demands, ZTE proposes IxWDM solution integrating WSON, PXC, L2 switching and OTN. It has such functions as intelligent control plane, large-capacity optical/electrical-layer service dispatching and excellent and reliable carrier-class protection to transmit carrier services at different network layers.

II. IxWDM solution

After progressing from P to P to OTN, WDM network is gradually entering into a new IxWDM age now. The intelligent WDM equipment with multi-granule dispatching function is the new choice following service and network development trends.

Core ideas of ZTE's IxWDM solution are **IP-based, intelligent, highly integrated, and CWDM/DWDM hybrid system.**

1. *i*P-based

IxWDM equipment has better compatibility with traditional TDM service and new IP service than traditional WDM equipment and can bear them on the same time. OTN-based ODUk encapsulation provides high-QoS rigid transmission pipe and transparent service transmission for IP service. L2 switching based on statistical multiplexing provides flexible tunnel meeting 802.1P QoS requirements, and VLAN frame processing in compliance with QinQ requirements expands WDM network application scope.

IxWDM system offers all types of interface to meet service demands, e.g., STM-1/4/16/64/256, 2.5G/10G/40G POS, FC1G/2G/4G/10G, ESCON, FICON and FE/GE/10GE interfaces. It converges 4_STM-1/4 services into 2.5G service, 4_STM-16/FC 2G services into OTU2 service, 8_GE/FC services into OTU2 service, and 2_FC 4G services into OTU2 service. It provides STM-64, 10GE LAN and 10GE WAN boards for 10G service. The user can select client-side service interface type in NM without changing hardware connection, which will simplify operation and raise maintenance efficiency. Extensible FC service makes possible SAN service across several thousands kilometers.

2. *i*ntelligent

IxWDM can dispatch WDM network services at several layers, get loaded with GMPLS-based control plane, and provide multiple intelligent, reliable carrier-class protection for IP network.

IxWDM multi-layer service grooming system can groom wavelength-level (10G/40G), subwavelength-level (ODU0/1/2) and L2 (GE/10G convergence) services to increase bearing efficiency and bear different services with different QoS. The grooming system is as follows:

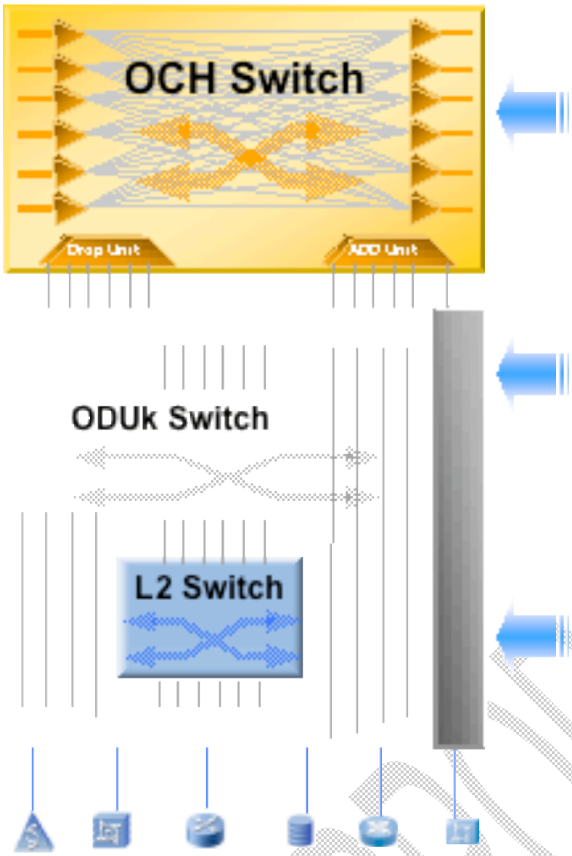

The mature optical-layer switching technology is ROADM. ZTE's IxWDM products employ WB (Wavelength Block), PLC (Planar Lightwave Circuit) and WSS (Wavelength Selective Switch) optical-layer dispatching schemes for different networks. WB and PLC are applied to simple 2-dimension network and WSS is applied to complex metro network to build multi-dimensional colorless and directionless sites.

ZTE's unique ODUk switching supports centralized and distributed cross dispatching functions. The centralized dispatching function provides the dispatching scheme with tributary and line separated. FC, GE/10GE and TDM/POS services accessed from tributary unit is sent to cross unit via the bus. After centralizedly dispatched, they are sent back to line unit and then to WDM network. DSS system, the distributed cross dispatching unit firstly witnessed in the industry, classifies four subrack slots into one group via MESH-based backplane line and makes non-blocking switching among service units. IxWDM electrical-layer switching system provides flexible subwavelength-level and ODUk-based service X-ADM function for the network.

IxWDM system integrating L2 switching can bear GE/10GE data services for metro core bearer network and access and converge metro broadband and VIP data services. L2 subsystem has GE/10GE interface at client side and OTUk interface following OTN standards at system side to access several GE and 10GE signals at the same time and converge them into 10GE signal through statistical multiplexing. It changes the history of the original network only providing rigid pipe for GE/10GE services, so it will greatly improves network wavelength utilization rate and reduces network layers.

The IxWDM system can be loaded with GMPLS-based control plane to bring historical revolution to intelligent WDM network. The combination of WSON control plane and multi-layer dispatching system will lead to intelligent and automatic WDM network which can implement fast service provision and protection against multi-node failure and provide SLA to facilitate market segmentation for carriers.

IxWDM has the overall carrier-class protection for WDM network. Optical-layer-based MS protection, line 1+1 protection, path 1+1 protection, path shared protection and MESH protection are fiber/subwavelength/wavelength-level protections. Wavelength 1+1 protection, subwavelength

1+1 protection, wavelength path shared protection, subwavelength path shared protection and MESH based on electrical-layer dispatching platform are the wavelength/subwavelength-level carrier-class protection with finer granularity. And L2-system-based ZESR protection is the reliable <50ms protection at data layer for IP services in WDM network.

3. High-*i*ntegrated

As ecological crises such as global warming, electric rubbish pollution and energy shortage are threatening our environment, the green environmental protection network has become the development trend for carriers at home and abroad. Smaller and safer equipment adopting environmental protection and power conservation technology will be preferred.

IxWDM equipment, in compliance with 89/336/EEC, ROHS, ISO 11469 and ETS 300 753 standards, will build the green network for major carriers. The traditional WDM equipment needs three cabinets for 80-wavelength full configuration, while IxWDM system, with smaller boards and higher integration, just needs one cabinet for such a configuration. And it supports flexible subrack-type installation for OLA site in WDM equipment. With the support of new technology, IxWDM product series replace traditional components with low-power-consumption and high-integration components, reducing the power consumption of traditional WDM equipment by 20-30_ in 80-wavelength full configuration.

III. IxWDM application

IxWDM, the intelligent WDM solution from metro edge to LH backbone network, includes ZXMP M720, ZXMP M820, ZXWM M920 and ZXONE 8600. High-integrated CWDM/DWDM product M720 is applied to metro access layer, M820 to metro convergence and core layers requiring flexible networking and service dispatching, M920 to backbone layer for ULH and large-capacity network transmission, and ZXONE 8600 to core nodes at backbone and core layers for T-level electrical-layer dispatching.

With deep understanding of optical network technology and rich experience in network construction, ZTE's optical network products are widely deployed in over 250 carriers in more than 90 countries across Europe, Asia Pacific, Latin America, Africa and Middle East, and its WDM equipment are used for backbone and metro networks in many countries such as China, India, Brazil, Pakistan, Thailand, Romania and Portugal.

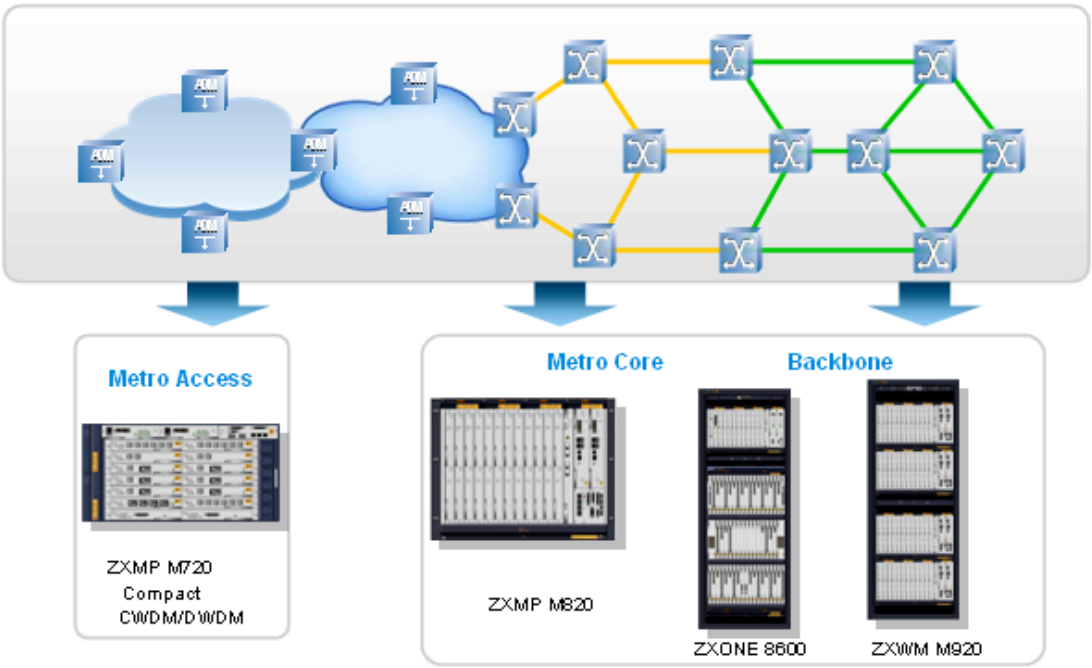

The author: Zhang Zhenchao from Bearer Networks Product Planning&System Design Dept.
ID: 143174
E-mail: zhang.zhenchao@zte.com.cn